HARLO®

10-FIVE ROUGH TERRAIN FORKLIFT - 4WD

HARLO - since 1958 - The Industry Leader in Rough Terrain Forklifts
Remarkable Quality and Manufacturing

The **10-FIVE** introduces **HARLO** into a larger capacity market. In addition to Agricultural applications, the performance of the unit can be utilized in construction, lumber/sawmill, forestry, metal, salvage yard, trucking, and rentals just to name a few.

Standard Options

When you want the fastest on the job site at **27.4 mph**, or **utilizing our generous 35 GPM main pump to lift at 96.3 fpm (15' 2 stage mast)** and **92.4 fpm (22' 3 stage mast)**, multitasking with amazing agility at **11.2" of ground clearance, turning at 11' radius, HARLO** is second to none! The internal wet brake and external holding brake give stopping and holding power for all applications.

Exceptional Features

Smooth-shifting is accomplished with our 4-speed manual or Auto-Shift AST Synchromesh transmission. Standard mast options of 15' two-stage and 22' three-stage lift your load with ease. The Cummins 74HP Diesel engine is low maintenance, fuel efficient, provides plenty of power, and has faster response times.

HP10500 ROUGH TERRAIN FORKLIFT - Specifications

Engine

Model	Cummins QSF3.8L Tier 4 Final Emission Certified
Type	4 Cycle Turbocharged Diesel
Cylinders	4
Displacement	229 CID
Fuel Injection	Bosch Electronic
Fuel	Ultra Low Sulfur Diesel
Tank Capacity	24 Gallons
Cooling	Liquid Cooled
Max Speed (eng)	2200 RPM
Idle Speed (eng)	800 RPM
Horse Power	74 HP @ 2200 RPM
Maximum Torque	295 ft/lb @ 1300 RPM
Water Pump Style	Integral
Engine Oil	SAE 15-W40

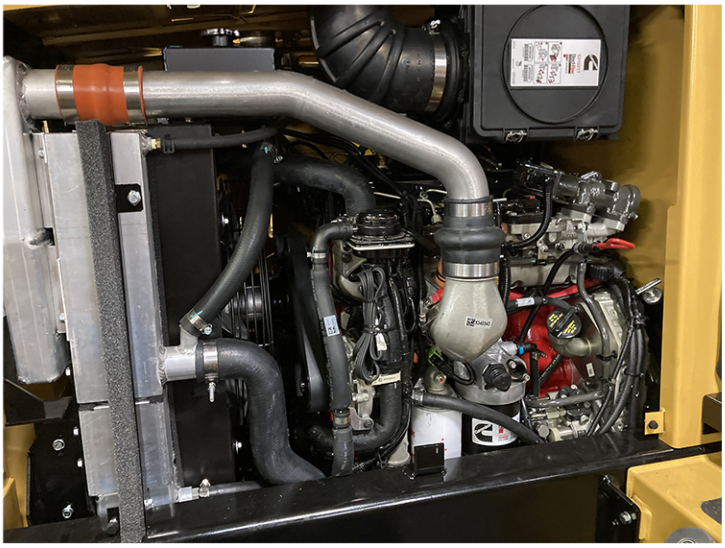

Mast

Forward Tilt	35 Degrees
Backward Tilt	10 Degrees
Side Shift	7.5” Total - 3.75” Left / 3.75” Right
Load Cushioning	Optional Accumulator

Tires

Front	19.5LR24
Rear	12R16.5

Mast Configurations

Lift Height	Carriage Type	Carriage Width	Stages	Lowered	Extended	Capacity @ 24” Load Center	4WD Weight
15’ Roller	Notch ITA	60”, 72”, 84”, 96”	2	125”	212”	10500lbs to 15’	17,300 lbs
22’ Roller	Notch ITA	60”, 72”, 84”, 96”	3	125”	300”	10500lbs to 12’ 6000lbs to 22’	18,300 lbs

Electrical

Voltage	12 Volts
Alternator	135 Amps
Battery	2 @ 950 CCA
Power Plugs	12V (single) USB (dual)

Warning Lights

Engine Oil Pressure - Transmission Oil Temperature - Air Cleaner Restriction Alternator Charge - Engine Water Temperature - Parking Brake - Fuel Level - Engine Preheat

Audible Alarm

Backup Alarm - HORN

Operator Environment

Standard Safety: Adjustable Seat Cushion - Rear View Mirror - Seatbelt
FOP Overhead Guard - See-thru MAST - A.N.S.I. B56.6 Safety Compliant

Gauges

Fuel Level - Hour Meter - Voltmeter - Coolant Temperature

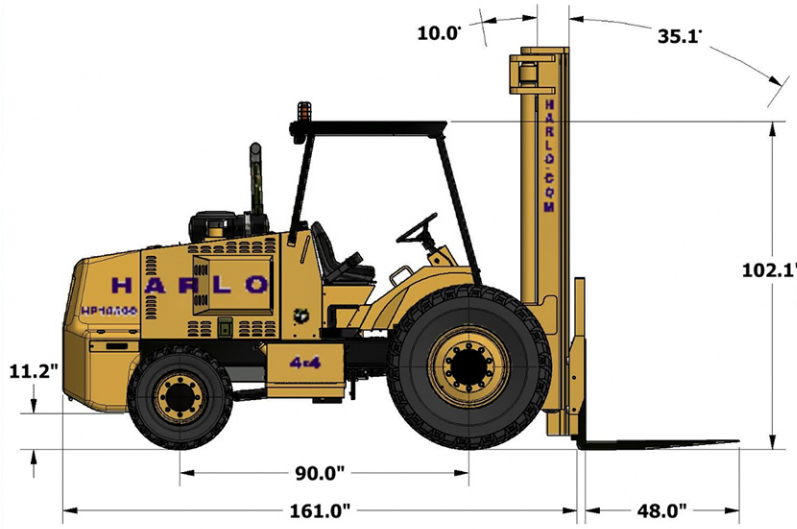

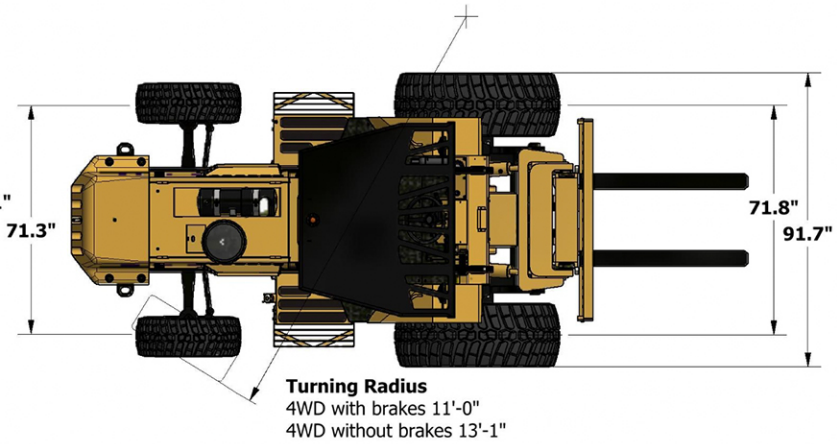

Auto Shift Technology

Bin Clamp

LED Light Guards

Engine Air PreCleaner

Accumulator

Swivel / Suspension Seat

4 Forks

Integrated Fork Positioner

Turn Signal Package

Fire Extinguisher

Enclosed Cab

Air Conditioner

Enclsoed Cab Heater

Radio

Engine Block Heater

Harlo Website

Facebook

Twitter